ADDENDUM # 2

DERWICK

DERWICK ASSOCIATES S.A.

DERWICK ASSOCIATES, S.A.
PDVSA SUPPLIER CODE: 350015280
REQUEST FOR QUOTATION (RFQ): 6000335081
1 x GE LM2500PE

Technical:

Equipment Data Sheets/Specification/Configuration

Model: GE LM 2500PE

Simple Cycle Performance	60Hz
• Serial Numbers	691-098
• Output	22MW
• Heat Rate	9,900 Btu/kWh (10,075J/kWh)
• Efficiency	36%
• Dual Fuel Equipment	
• Exhaust Flow	143 lb/sec
• Turbine Speed	3600 rpm
• Exhaust Temperature	860°F (429°C)
• Model Designation	LM2500PE
• Fuel Consumption	59,822 (Gallons/hr)
	14,956 (Liters/hr)
• Cubic-Feet/hr	203,888 (Cubic feet/hr)

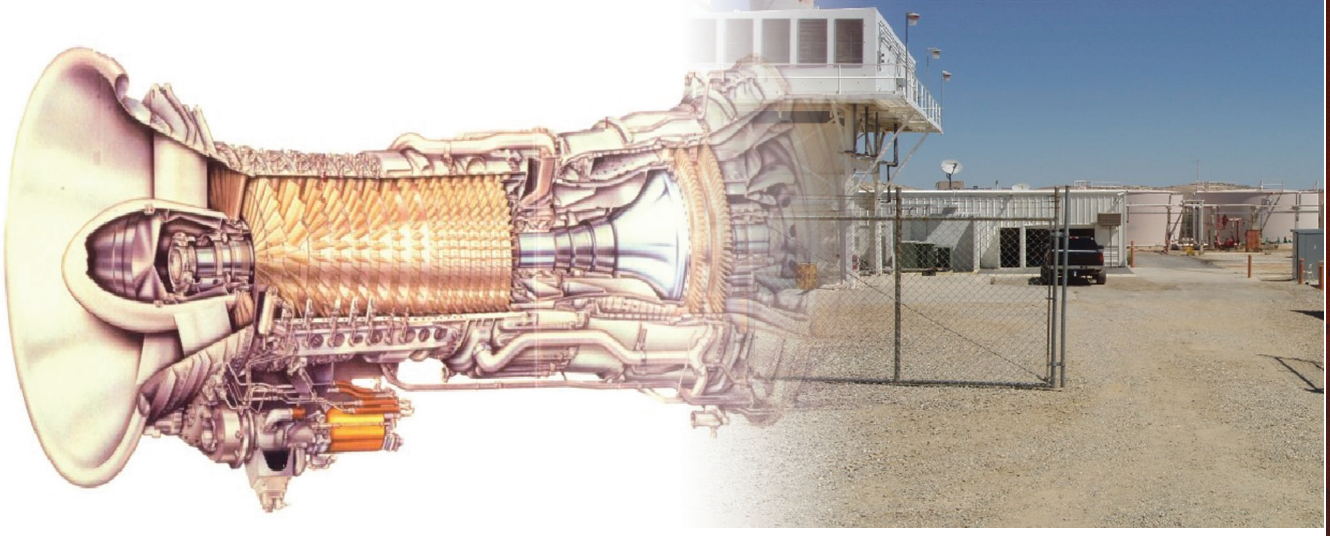

STANDARD 60Hz LM2500 GENERATOR PACKAGE

Gas Turbine

16 Stage Axial Compressor
- 1st 6 stages have variable station
- Horizontal Split Casing
- 20:1 Compression Ratio
- 150 lb/s Nominal Inlet Mass Flow

Annular Combustor
- 30 Nozzles Gas Fuel, Water Injection for NOx Control

6 Stage Power Turbine

Generator

Continuous Duty 13.8kV, 0.85 PF
2 Pole, 3 Phase Brushless Exciter
WPII Weather Protected
Voltage Regulator/Neutral Side Protection CT's
NEMA Class F Insulation & B Temperature Rise

Package

24V and 125V DC Batteries
90dBA Near Field Design
Barrier Inlet Air Filters
Electro-Hydraulic Start System
Class I Div 2 Group D Class Electrical System
Digital Control System with a Human Machine Interface (HMI)
Turbine and Generator Lube Oil System with Simplex Shell and Tube Coolers
On/Off-line Water Wash

MMG Tower
Piso 16
Calle 53
Urb. Marbella
Ciudad Panama, Panama
ptrebbau@derwickassociates.com

DERWICK
DERWICK ASSOCIATES S.A.

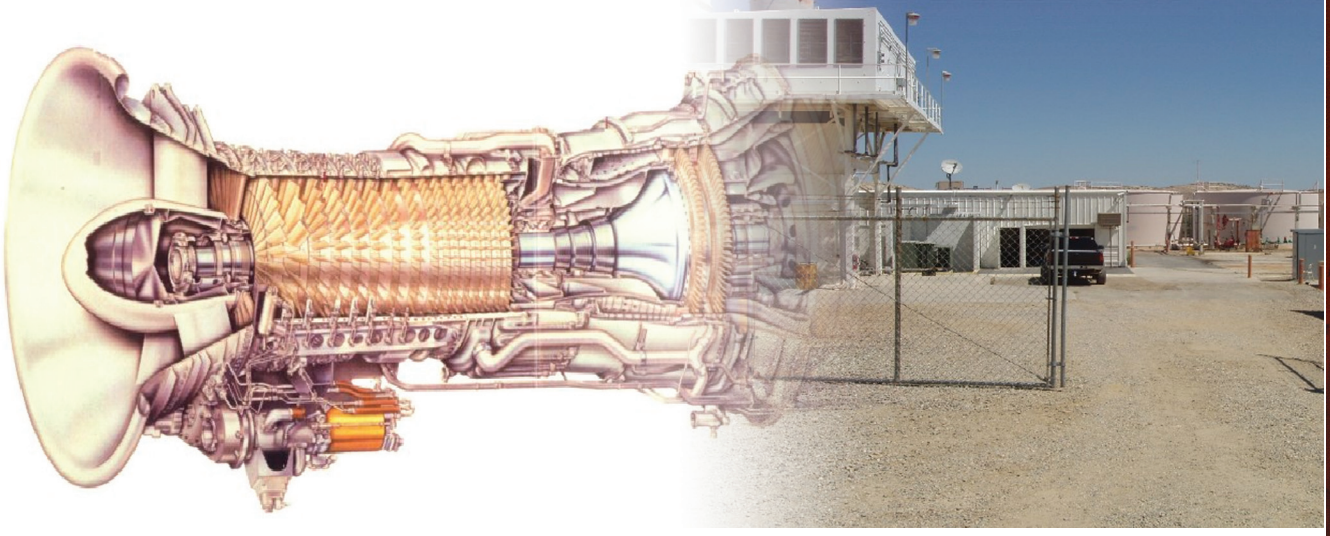

LM2500 FACT SHEET

LM2500 60Hz Output and Heat Rate

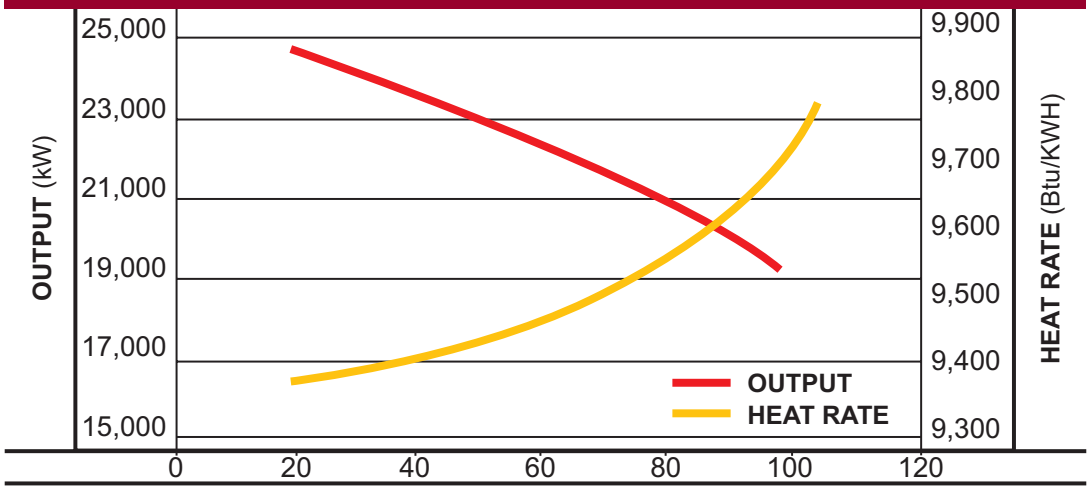

0 ft. 60% RH, 4/6 in H20 inlet/exhaust loss on natural gas with water injection to 25ppmvd NOx water inj.

Turbine

	LM2500
Power Output (kWe)	18,400
Heat Rate LHV (Btu/kWe-Hr)	9,900
Exhaust Flow (lbs/sec)	143
Exhaust Temperature (ºF)	860
Emissions (ppmvd)	NOx/CO
Gas-DLE	25/25
Gas or Liquid-Water	25/75, 42/55
Gas-Steam	25/74
Power Turbine Speed (rpm)	3,600
No. of Compressor Stages	16
No. of Turbine Stages	6

MMG Tower
Piso 16
Calle 53
Urb. Marbella
Ciudad Panama, Panama
ptrebbau@derwickassociates.com

DERWICK
DERWICK ASSOCIATES S.A.

Descriptive Equipment Information/Configuration:

Gas Turbine Generator Set Scope Of Supply

- LM2500PE gas turbine completely refurbished and configured for both natural gas and liquid fuel operation
- Coupling for direct drive at 3600 rpm, 60hz operation
- Weatherproof acoustic enclosure for gas turbine and electric generator
- "Single lift" I bean base plate to support turbine and 23.4 MW Brush generator (13.8KV)
- New or similar Air inlet filtration system for GT combustion air, generator cooling air and compartment ventilation systems.
- Turbine exhaust system including industrial grade silencer and stack
- Separate lube oil systems for turbine and generator including fin-fan coolers
- Electro hydraulic starting system
- Fire detection and extinguishing system
- New or Refurbished Electronic control panel for gas turbine & generator including 24v control batteries and charger
- Gas turbine water wash system
- Neutral and line side cubicles mounted including CT's and lightning arrestors (Derwick's electrical scope ends at these cubicles)
- One modular control room with Turbine Control Panel, Generator Control Panel, GTG MCC's, batteries and chargers.

LM2500PE
SCOPE OF SUPPLY

Gas Turbine

General Electric LM2500 - PE-MG gas turbine, ISO rated at 31,235 HP for continuous duty, with a heat rate of 6772 Btu/HP-hr (LHV). Suitable for base load or peaking, designed for simple cycle, combined cycle or cogeneration service. Turbine is shock mounted and shipped in position, ready to run. Turbine is complete with "last chance" inlet screen and bellmouth seal for protection against foreign object damage.

Generator

Air-cooled generator B.E.M. Model 167ESS (or equal) with brushless excitation, suitable for Class 1, Group D, Division 2 areas, rated at 35,412 KVA @ 0.85 pf, 59ºF cooling air, 13,800 volts, 60 Hz. The generator can handle the full continuous power of the gas turbine at any ambient temperature throughout the operating range. Filtered air from the inlet air filter is used to cool the generator. A cooling water loop and its associated fans and pumps are not required. The generator is a utility grade, 2-pole, synchronous design and includes a brushless excitation system with permanent magnet generator. Neutral and lineside cubicles and voltage regulator are also included.

Coupling

The LM2500 gas turbine drives the generator with a dry, flexible-diaphragm coupling that bolts directly to the forged generator hub and the turbine output hub. No gearbox is required. The coupling transmits the full turbine load torque at all operation conditions. The coupling spacer is removed for shipment and is reinstalled at the jobsite by Derwick.

Enclosure

Both gas turbine and generator are fully covered by a weatherproof acoustic enclosure. The enclosure is completely assembled and mounted over the equipment prior to testing and shipment. Both turbine and generator compartments are fully ventilated with redundant fans. Explosion-proof AC lighting and DC emergency lighting are provided in both compartments. A bridge crane in the turbine enclosure simplifies engine removal and maintenance.

Baseplate

Full length I-beams are used to support the gas turbine, generator, and air inlet system. This provides single lift capability for the total equipment package. Dowelling of

baseplate sections in the field is not required. Lifting spools are incorporated in the baseplate design. A spreader bar and rigging are provided at no charge if returned prepaid to Derwick within 8 weeks of shipment. The rigidity of the baseplate is suitable for UBC earthquake Zone 4 installations.

Inlet Air System

furnishes a modular, multi-stage filtration system consisting of weatherhoods and inlet screens, a pre-filter and a final barrier filter. All air for ventilation systems is filtered to the same level as turbine combustion air. Optional anti-ice system, evaporative cooling system and combustion air heating or chilling system are available. Filtered air is silenced before entering the turbine plenum. This compact arrangement eliminates the need for customer-supplied inlet ducting when the standard design is utilized. Internal lighting of the filter house is provided for inspection and service. Internal and external ladders and platforms for servicing the filter are included.

Exhaust System

The LM2500 package includes a thermally insulated exhaust collector to direct the turbine exhaust gases to an 80"h x 55"w rectangular flange in the side of the main enclosure. Customer furnished expansion joint, ducting; ducting supports and mounting hardware are required for heat recovery applications. For simple cycle, an exhaust silencer assembly may be ordered as an option. Right-hand exhaust, as viewed from the exciter end, is standard. Left-hand exhaust may be ordered as an option.

Piping System

Stainless Steel throughout. Lube Oil, Water and Fuel piping and fittings are Type 304 Stainless Steel. Steam piping and fittings are Type 321 Stainless Steel, and all piping is fabricated in accordance with ANSI B31.1 Power Piping Code requirements. Pipe spools are hydrostatically tested at 1.5 time's maximum working pressure. Fuel, steam and high pressure hydraulic piping welds are 100% x-ray inspected. Lube oil piping welds are randomly x-rayed. Turbine and Generator Lube Oil Reservoirs are Type 304 Stainless Steel. The pressure vessels on the turbine baseplate (Water Wash Tanks, Generator Lube Oil Rundown Tanks) are also Type 304 Stainless Steel and are ASME Code stamped.

Fuel System

A natural gas fuel system using an electronically controlled fuel-metering valve is supplied in the basic package. For full-load operation, the gaseous fuel must be supplied to the baseplate at 375 psig ± 20 psig (lower starting pressures available Liquid fuel or

dual fuel systems are available as factory options. Fuel specifications are included in Section 12. All necessary shutoff valves, piping and instruments between the baseplate connection and the engine are included.

Lube Oil Systems

Two systems - mineral oil for the generator, synthetic oil for the gas turbine. Each lube oil system includes duplex full-flow filters, stainless steel piping and reservoirs and stainless steel trimmed valves. The oil from both systems is cooled by dualcore fin-fan coolers mounted on the enclosure roof. All interconnecting piping is included. The coolers are 100% redundant and either can handle the cooling load. The full-flow oil filters can be serviced during operation. An optional water-cooled design is available utilizing duplex shell and tube coolers for customer installation on a separate foundation.

Electro-Hydraulic Starting Module

Rotates turbine for starting and water washing. The starting system includes a 200 HP electric motor, hydraulic pump, filters, cooler and controls mounted on a separate baseplate. The pump powers a hydraulic starting motor mounted on the turbine auxiliary gearbox. Customer furnishes interconnecting hydraulic piping between hydraulic start module and rotating equipment module.

Digital Control System

The Derwick control system provides operating, safety and sequencing controls for the gas turbine and generator. The unit panel is suitable for mounting indoors in a non-hazardous, air-conditioned control room. The panel contains a Woodward programmable, microprocessor-based controller for fuel management and sequencing. Also included are a Bently-Nevada vibration monitor, a manual/auto voltage regulator, a color CRT, and meters and switches for starting, synchronizing, and loading. CRT annunciates alarms and shutdowns, status, analog valves (pressure, temp. etc.), with RS-232 interface to customer DCS. Baseplate mounted equipment includes pressure, level, flow, speed and temperature sensors, plus valves and actuators. 24V DC Nickel-Cadmium batteries and dual battery chargers for control system power are included.

Fire Protection System

The fire and gas detection and extinguishing system includes optical flame detection, hydrocarbon sensing and thermal detectors; complete with factory installed piping and nozzles in both generator and engine compartments. The fire protection system includes cylinders of CO2 extinguishant mounted on the side of the generator set enclosure. Derwick furnishes a dedicated 24V DC battery and charger to power the fire protection system. Fire system alarms and shutdowns are annunciated at the turbine control panel. An alarm sounds at the turbine enclosure and unit control panel if the gas detectors sense high gas levels, or if the system is preparing to release the extinguishant. When activated, the primary extinguishant cylinders discharge into both the turbine and generator compartments via multiple nozzles, and ventilation dampers close automatically. After a time delay, the reserve supply of extinguishant is discharged, if required.

“On Line" Cleaning and Soak Wash System

For baseload application, an "on-line" cleaning system is included which allow customers to clean the compressor section of the engine during full power operation. The same system reservoir and piping are utilized for off-line soak washing. Baseplate connections are provided for customer supplied purified water at 15-85 psig and air at 85-120 psig filtered to 20 microns.

Component Testing and Package Full Load Test

The generator is tested to IEEE 115 or IEC 34.3 standards at its factory of manufacture. The gas turbine is performance tested at the G.E. Aircraft Division factory. The entire assembled generator set is then tested at Derwicks' factory to verify performance guarantees. A full KW load string test of the turbine generator set is performed using the contract controls and auxiliary systems. Water and steam systems are functionally proven but normally not operated during the full load test.

Drawings, Documentation and Manuals

The basic equipment package is supplied with a customer drawing package, which includes general arrangement drawings, flow and instrument diagrams, electrical one-line drawings and a conduit interconnection plan. Additional electrical interconnect and logic drawings are provided for record. Maintenance manuals are provided, printed in the English language, using standard English engineering units. The manuals cover operating concepts for power generating equipment, guides to troubleshooting, and basic information on components and equipment within the turbine generator set.

Equipment Origin

The LM2500 is manufactured in GE Plant at Jacinto port in Houston, Texas

All the refurbishes of this unit was done in our plant at Sedalia, MO

Outline Drawing Prelimary

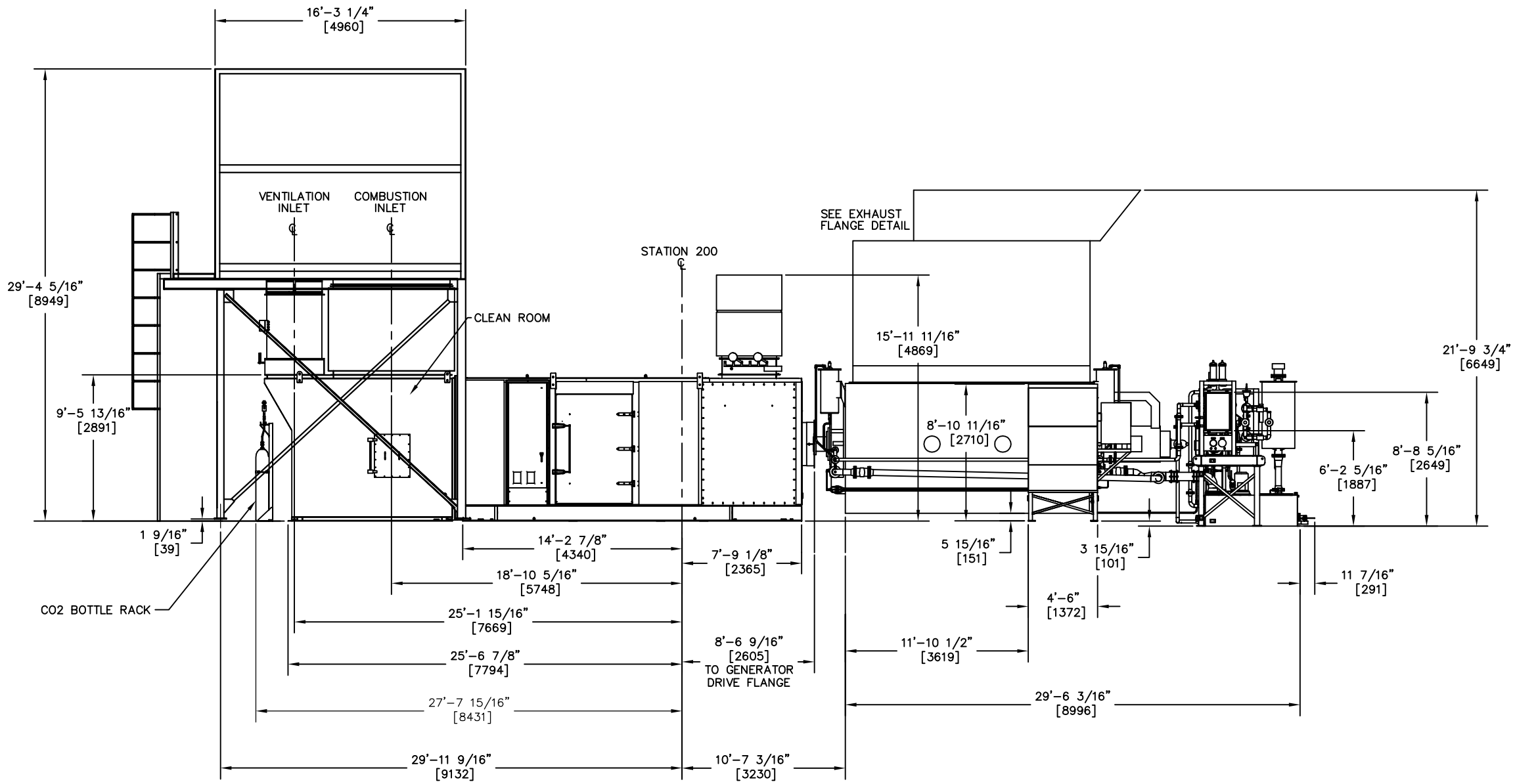

LEFT SIDE VIEW

RESERVED

TYPICAL

© COPYRIGHT, 2004, GE PACKAGED POWER, L.P., ALL RIGHTS. RESERVED. THIS DRAWING IS THE PROPRIETARY AND/OR CONFIDENTIAL PROPERTY OF GE PACKAGED POWER, L.P., AND IS LOANED IN STRICT CONFIDENCE WITH THE UNDERSTANDING THAT IT WILL NOT BE REPRODUCED NOR USED FOR ANY PURPOSE EXCEPT THAT FOR WHICH IT IS LOANED. IT SHALL BE IMMEDIATELY RETURNED ON DEMAND, AND IS SUBJECT TO ALL OTHER TERMS AND CONDITIONS OF ANY WRITTEN AGREEMENT OR PURCHASE ORDER WHICH INCORPORATES OR RELATES TO THIS DRAWING.

REV	DESCRIPTION	DRAWN	DATE	CHECK	DESIGN	DES ACT	QUALITY

REVISIONS

THIRD ANGLE PROJECTION

UNLESS OTHERWISE SPECIFIED DIMENSIONS ARE IN INCHES DO NOT SCALE DRAWING

TOLERANCES

DECIMALS	FRACTIONAL	ANGULAR
.XX ± .03	±1/16"	±1°
.XXX ± .010		

NEXT ASSY.

UNIT TYPE

LM2X

ADDL INFO

GE PACKAGED POWER, L.P.

TITLE

GENERAL ARRANGEMENT
MAIN UNIT
RIGHT HAND CONNECTIONS

DWG NO. XXX200-02

REV.

SCALE 1/4" = 1'-0"

SHEET 2 OF 6

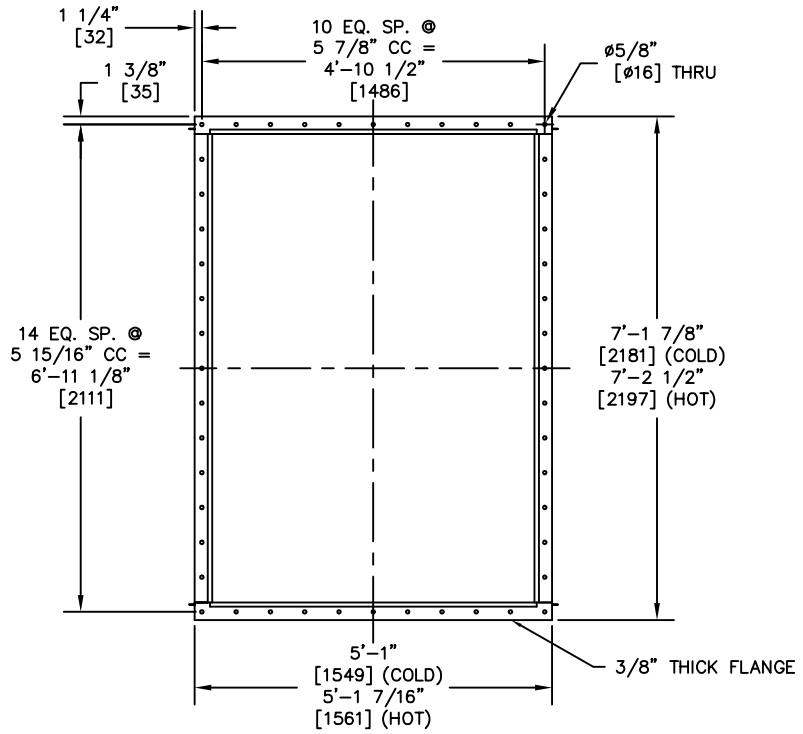

EXHAUST FLANGE DETAIL

SCALE : 3/4"=1'

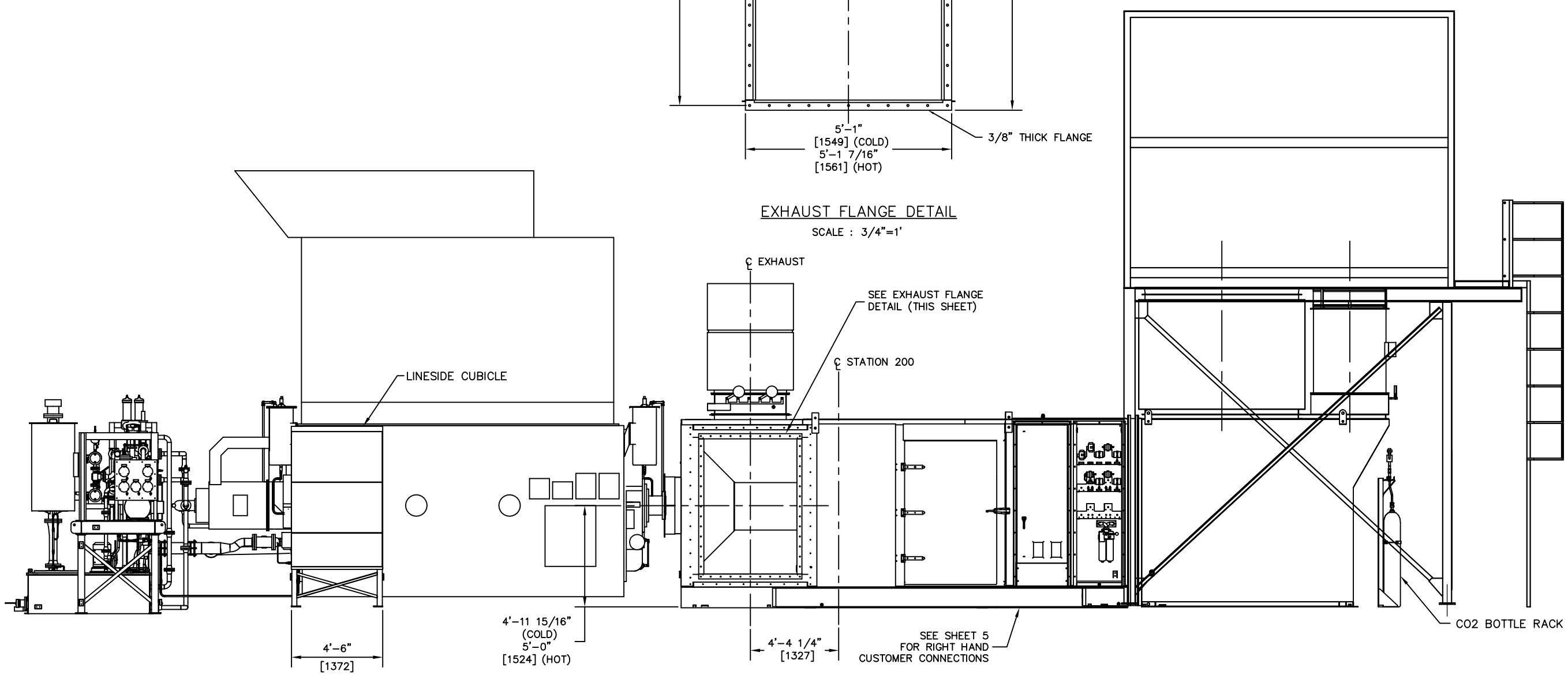

RIGHT SIDE VIEW

RESERVED

TYPICAL

© COPYRIGHT, 2004,
GE PACKAGED POWER, L.P.,
ALL RIGHTS. RESERVED.
THIS DRAWING IS THE PROPRIETARY AND/OR CONFIDENTIAL PROPERTY OF GE PACKAGED POWER, L.P., AND IS LOANED IN STRICT CONFIDENCE WITH THE UNDERSTANDING THAT IT WILL NOT BE REPRODUCED NOR USED FOR ANY PURPOSE EXCEPT THAT FOR WHICH IT IS LOANED. IT SHALL BE IMMEDIATELY RETURNED ON DEMAND, AND IS SUBJECT TO ALL OTHER TERMS AND CONDITIONS OF ANY WRITTEN AGREEMENT OR PURCHASE ORDER WHICH INCORPORATES OR RELATES TO THIS DRAWING.

REV	DESCRIPTION	DRAWN	DATE	CHECK	DESIGN	DES ACT	QUALITY

REVISIONS

THIRD ANGLE PROJECTION

UNLESS OTHERWISE SPECIFIED DIMENSIONS ARE IN INCHES DO NOT SCALE DRAWING

DECIMALS	TOLERANCES FRACTIONAL	ANGULAR
.XX ± .03 .XXX ± .010	±1/16"	±1°

NEXT ASSY.

UNIT TYPE

LM2X

ADDL INFO

GE PACKAGED POWER, L.P.

TITLE

GENERAL ARRANGEMENT
MAIN UNIT
RIGHT HAND CONNECTIONS

DWG NO. XXX200-03

REV.

SCALE 3/8" = 1'-0"

SHEET 3 OF 6

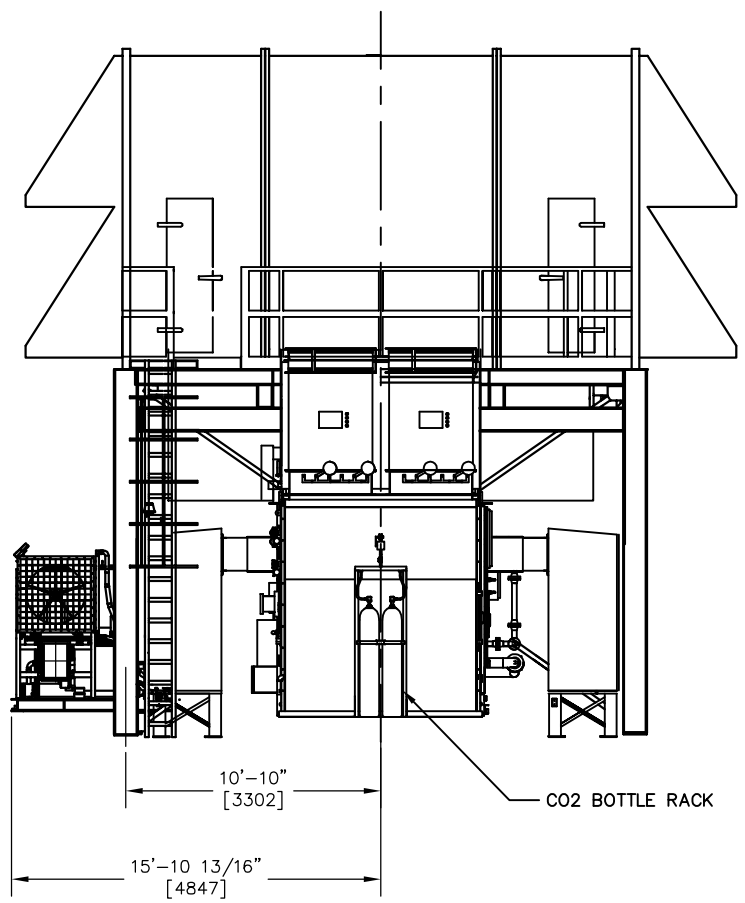

TURBINE END

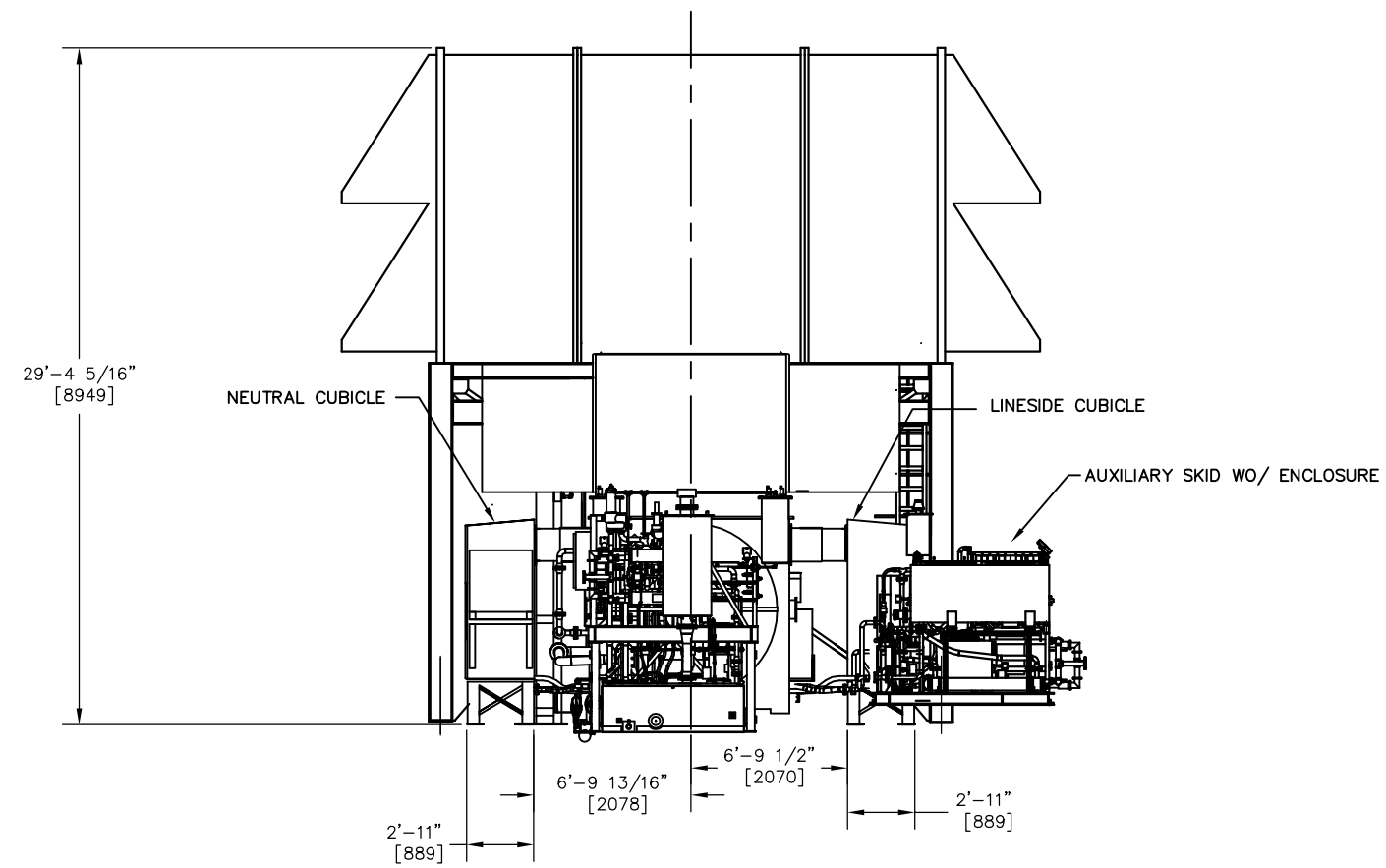

GENERATOR END

RESERVED

TYPICAL

© COPYRIGHT, 2004,
GE PACKAGED POWER, L.P.,
ALL RIGHTS. RESERVED.
THIS DRAWING IS THE PROPRIETARY AND/OR CONFIDENTIAL PROPERTY OF GE PACKAGED POWER, L.P., AND IS LOANED IN STRICT CONFIDENCE WITH THE UNDERSTANDING THAT IT WILL NOT BE REPRODUCED NOR USED FOR ANY PURPOSE EXCEPT THAT FOR WHICH IT IS LOANED. IT SHALL BE IMMEDIATELY RETURNED ON DEMAND, AND IS SUBJECT TO ALL OTHER TERMS AND CONDITIONS OF ANY WRITTEN AGREEMENT OR PURCHASE ORDER WHICH INCORPORATES OR RELATES TO THIS DRAWING.

REV	DESCRIPTION	DRAWN	DATE	CHECK	DESIGN	DES ACT	QUALITY

REVISIONS

THIRD ANGLE PROJECTION

UNLESS OTHERWISE SPECIFIED DIMENSIONS ARE IN INCHES DO NOT SCALE DRAWING

DECIMALS	TOLERANCES FRACTIONAL	ANGULAR
.XX ± .03 .XXX ± .010	±1/16"	±1°

NEXT ASSY.

UNIT TYPE LM2X

ADDL INFO

GE PACKAGED POWER, L.P.

TITLE
GENERAL ARRANGEMENT
MAIN UNIT
RIGHT HAND CONNECTIONS

DWG NO. XXX200-05

REV.

SCALE 1/4" = 1'-0"

SHEET 5 OF 6

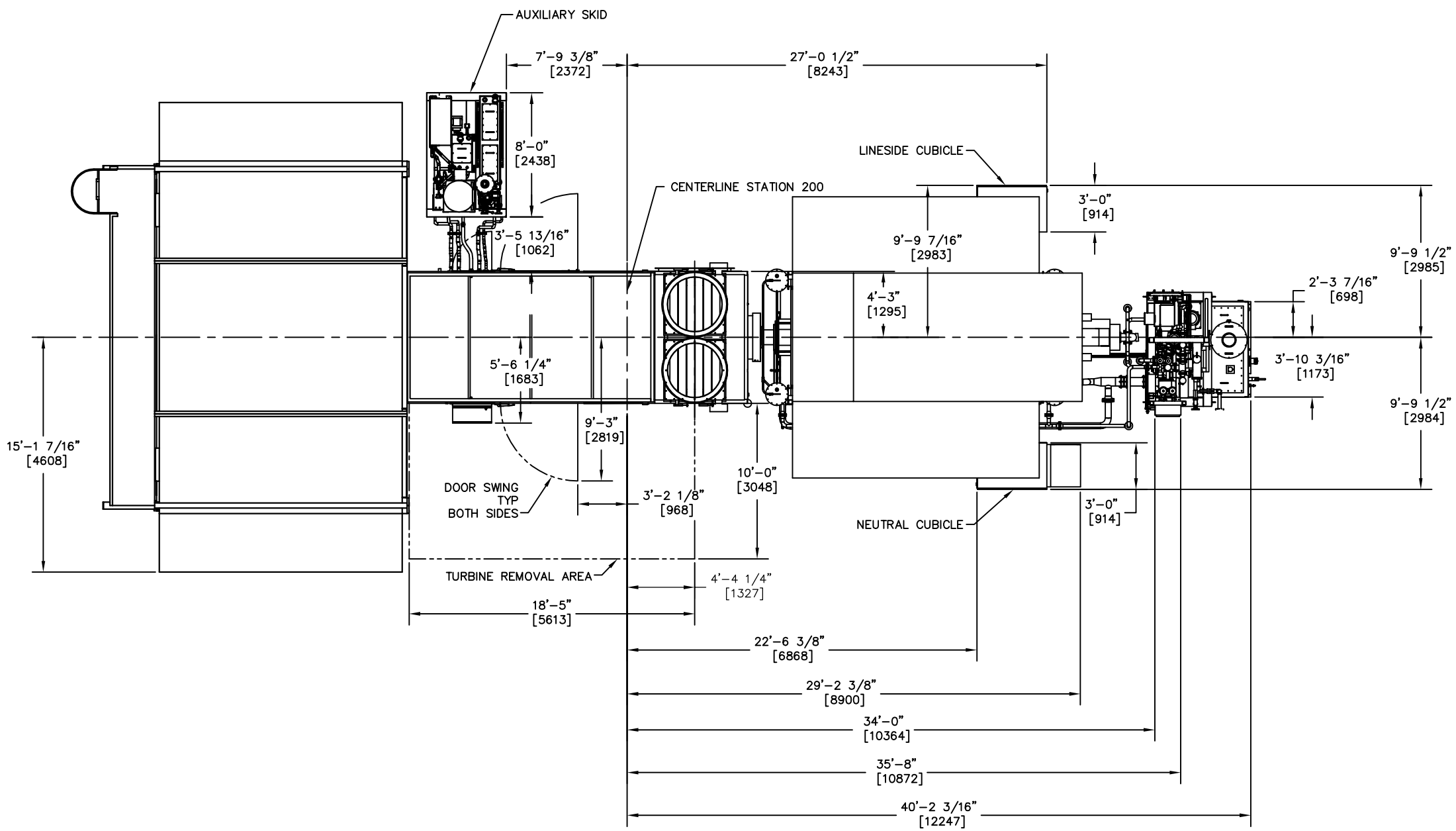

TOP VIEW

NOTES:

1. FLANGE CONNECTION TOLERANCE: ± 1/8" [3].
   TOLERANCE ON ELECTRICAL CONNECTIONS ± 1/8" [3].
   TOLERANCE ON BOLT HOLES ± 1/16" [2] TRUE POSITION.
2. DIMENSIONS AND VALUES IN [] ARE SI UNITS AND ARE FOR REFERENCE ONLY. EQUIPMENT WILL BE DESIGNED AND MANUFACTURED USING ENGLISH UNITS ONLY.
3. ADDITIONAL EXTERIOR LIGHTING TO BE SUPPLIED BY OTHERS.
4. CUSTOMER DRAWING NUMBER CONSIST OF:
   (ORDER #)-(CONFIG OR SITE #)-(STANDARD DRAWING #),
   AND REFERRENCE AS X-Y-(STANDARD DRAWING #), WHERE
   X = ORDER # AND Y = CONFIG OR SITE #.

REFERENCE DRAWINGS:

X-Y-683222 FOUNDATION LOADING, TURBINE BASE & PLENUM
X-Y-683218 GENERAL ARRANGEMENT, AUXILIARY SKID
X-Y-683208 GENERAL ARRANGEMENT, GLO TANK SKID
X-Y-683284 GENERAL ARRANGEMENT, CO2 BOTTLE RACK

SAFETY NOTE: CAUTION

1 GEPPLP SHALL NOT BE LIABLE FOR DAMAGE CAUSED BY EXCESSIVE FLANGE LOADS OR INADEQUATE EXPANSION JOINT DESIGN. FAILURE TO PROVIDE FOR ADEQUATE THERMAL EXPANSION OR EXCEEDING ALLOWABLE FLANGE LOADS MAY RESULT IN DAMAGE TO OR DESTRUCTION OF FASTENERS AND ENGINE/EXHAUST SYSTEM RELATED HARDWARE RESULTING IN EXHAUST LEAKS AND ACCELERATED WEAR ON THE EXHAUST DIFFUSER ASSEMBLY. IT IS THE CUSTOMER'S RESPONSIBILITY TO ALLOW A CONSERVATIVE AMOUNT OF EXPANSION CAPABILITY TO ACCOMODATE INSTALLATION ERRORS AND TOLERANCE STACK-UPS FOR THE COMPLETE EXHAUST SYSTEM.

RESERVED

TYPICAL

© COPYRIGHT, 2004, GE PACKAGED POWER, L.P., ALL RIGHTS RESERVED. THIS DRAWING IS THE PROPRIETARY AND/OR CONFIDENTIAL PROPERTY OF GE PACKAGED POWER, L.P., AND IS LOANED IN STRICT CONFIDENCE WITH THE UNDERSTANDING THAT IT WILL NOT BE REPRODUCED NOR USED FOR ANY PURPOSE EXCEPT THAT FOR WHICH IT IS LOANED. IT SHALL BE IMMEDIATELY RETURNED ON DEMAND, AND IS SUBJECT TO ALL OTHER TERMS AND CONDITIONS OF ANY WRITTEN AGREEMENT OR PURCHASE ORDER WHICH INCORPORATES OR RELATES TO THIS DRAWING.

REV	DESCRIPTION	DRAWN	DATE	CHECK	DESIGN	DES ACT	QUALITY

REVISIONS

THIRD ANGLE PROJECTION

UNLESS OTHERWISE SPECIFIED DIMENSIONS ARE IN INCHES DO NOT SCALE DRAWING

DECIMALS	TOLERANCES FRACTIONAL	ANGULAR
.XX ± .03	±1/16"	±1°
.XXX ± .010		

NEXT ASSY.

UNIT TYPE LM2X

ADDL INFO

GE PACKAGED POWER, L.P.

TITLE
GENERAL ARRANGEMENT
MAIN UNIT
RIGHT HAND CONNECTIONS

DWG NO. XXX200-01 REV.

SCALE 1/4" = 1'-0" SHEET 1 OF 6

EXCLUSIONS

We certify that our quotation complies with all your inquiry, documents and specifications except for the following:

Derwick Associates has excluded these items listed below from our offering. There may be part of the EPC Proposal. Any other equipment or service not described in our written proposal is also excluded.

- Balance of plant and energy optimization controls
- Buildings, foundations, anchor bolts, embedments and grouting
- Bus bars and bus duct beyond generator lineside and neutral enclosures
- Distributed plant control
- Filter house support structure – other than standard
- Field Supervision
- Fuel, fluids and chemicals
- Fuel storage tanks, forwarding equipment and primary fuel filter
- Gas compression, filtration and separation or regulation equipment
- High voltage transformer(s), cables, switchgear and associated equipment
- Interconnecting piping, conduit, and wiring between equipment modules (site layout is unknown at this time)
- Plant utilities
- Power plant calibration tools and ordinary hand tools
- Spare parts (quoted separately)
- All Transportation to job site loading and off loading of equipment
- Water injection pressurization equipment
- Water treatment and purification equipment
- Yard light and fences